2019 General License Course

Chapter 4.4 – 4.7
Components and Circuits

Greg Wolfe
KI0KK
1/19/2019

Chapter 4 Components and Circuits

4.4 Reactance and Impedance
4.5 Active Components
4.6 Practical Circuits
4.7 Basic Test Equipment

Reactance and Impedance

Chapter 4.4

4.4 Reactance and Impedance

(Page 4-16)

Reactance

Capacitors and Inductors resistance to the flow of ac current is called reactance (X) measured in ohms (Ω) [G5A02, G5A03, G5A04, G5A09].

Capacitors and Inductors store and release energy in the circuit.

Capacitors store energy in an electric field.

Inductors store energy in a magnetic field.

4.4 Capacitive Reactance

(Page 4-16 to 4-17)

Capacitor

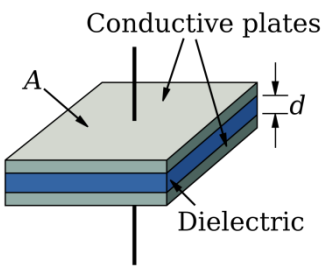

Capacitor behavior as an initial dc voltage is applied

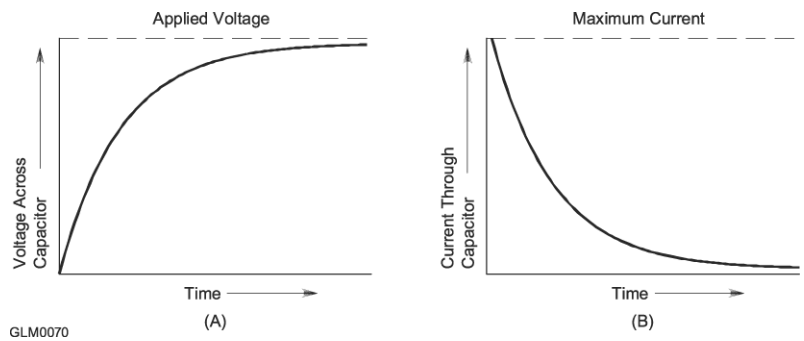

A capacitor blocks dc current, resists low frequency ac current and passes high frequency ac current.

The opposition to ac current flow from the stored energy in a capacitor is called capacitive reactance denoted as $X_{c.}$

$$Xc = \left(\frac{1}{2\pi fC}\right)$$ Where f = frequency in Hz and C = capacitance in farads

As the frequency of a signal increases capacitive reactance decreases and vice–versa [G5A06].

4.4 Inductive Reactance

(Page 4-17 to 4-18)

Inductor

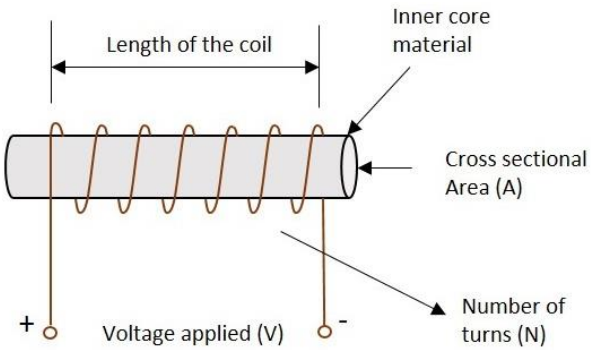

Inductor behavior as an initial dc voltage is applied

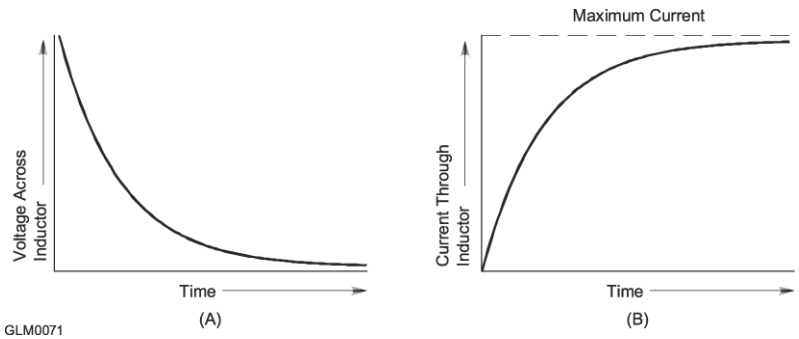

An inductor blocks high-frequency and passes low-frequency ac currents.

The opposition to ac current flow from the stored energy in an inductor is called inductive reactance denoted by X_L.

$X_L = 2\pi fL$ Where f = frequency in Hz and L = inductance in henrys

As the frequency of a signal increases inductive reactance increases and vice–versa [G5A05].

4.4 Impedance

(Page 4-18)

Impedance is the general term for the opposition to current flow in an ac circuit caused by resistance, reactance and any combination of the two denoted by the symbol Z [G5A01].

All inductors and capacitors have some amount of resistance with their reactance.

Impedance (Z) is measured in ohms [G5A10] as a complex number **(R +/- j)** with -j being capacitive and +j being inductive.

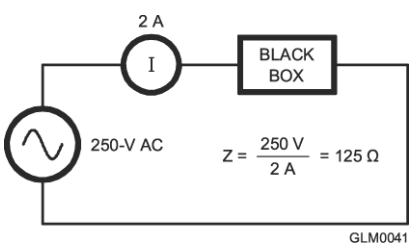

- The impedance of the Black Box is the ac voltage divided by the ac current at a given frequency.
- If there is no reactive component, only resistance, the impedance will not varying with frequency.

4.4 Resonance

(Page 4-18)

Resonance in a circuit or antenna is the condition in which the X_C and X_L are equal and cancel each other out.

Series Resonance

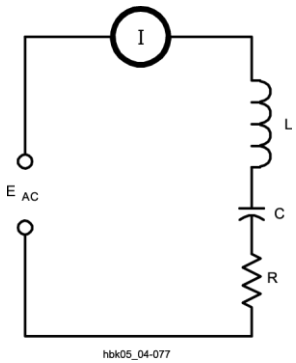

Circuit resistance is at a minimum

Parallel Resonance

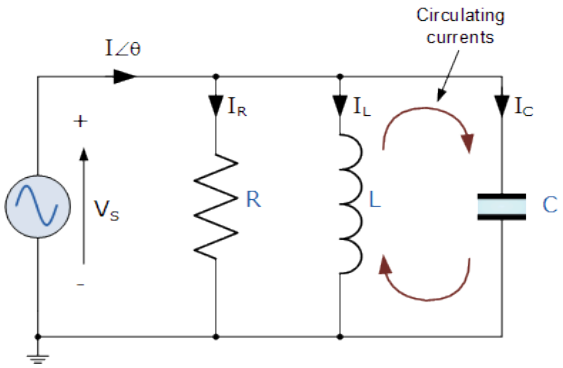

Circuit resistance is at a maximum

Resonance is useful in filters and tuning circuits to select or reject specific frequencies.

4.4 Impedance Transformation

(Page 4-19)

Transformers are used to change the ratio of voltage and current while transferring energy. This change causes the impedance between the primary and secondary of the transformer to be changed or "transformed".

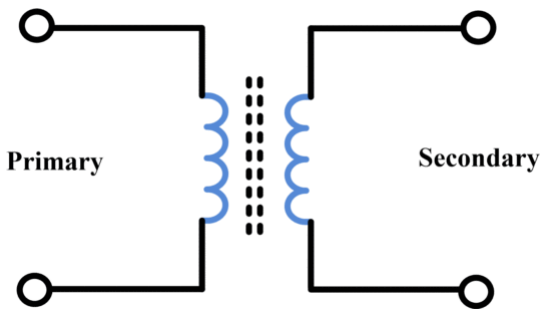

$\sqrt{(\frac{Z_p}{Z_s})} = N_p/N_s$ [G5C07]

N_p/N_s is defined as the turns ratio of the transformer and is always expressed as the larger vs the smaller number, i.e. 5:1.

4.4 Impedance Matching

(Page 4-19)

Maximum Power Transfer Theorem states that maximum power is transferred when the source's and load's output impedances are equal and purely resistance [G5A07, G5A08].

Transmitter and Antenna impedances typical are 50Ω but antenna impedance usually varies as the operating frequency changes.

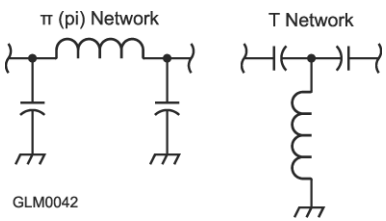

An impedance-matching network (pi or T Network, adjustable or fixed component) can be used to maintain the desired impedance match [G5A11].

- Specialized RF impedance transformers may also be used [G5A12].
- Special lengths and connections of transmission line can also perform impedance matching [G5A13]

What is impedance?

[G5A01]

A. The electric charge stored by a capacitor
B. The inverse of resistance
C. The opposition to the flow of current in an AC circuit
D. The force of repulsion between two similar electric fields

What is reactance?

[G5A02]

A. Opposition to the flow of direct current caused by resistance

B. Opposition to the flow of alternating current caused by capacitance or inductance

C. A property of ideal resistors in AC circuits

D. A large spark produced at switch contacts when an inductor is de-energized

Which of the following causes opposition to the flow of alternating current in an(a) [?]

inductor? [G5A03]

A. Conductance
B. Reluctance
C. Admittance
D. Reactance

capacitor? [G5A04]

A. Conductance
B. Reluctance
C. Reactance
D. Admittance

How does an [?] react to AC

Inductor [G5A05)

A. As the frequency of the applied AC increases, the reactance decreases
B. As the amplitude of the applied AC increases, the reactance increases
C. As the amplitude of the applied AC increases, the reactance decreases
D. As the frequency of the applied AC increases, the reactance increases

Capacitor [G5A06]

A. As the frequency of the applied AC increases, the reactance decreases
B. As the frequency of the applied AC increases, the reactance increases
C. As the amplitude of the applied AC increases, the reactance increases
D. As the amplitude of the applied AC increases, the reactance decreases

Why is impedance matching important?

[G5A08]

A. So the source can deliver maximum power to the load
B. So the load will draw minimum power from the source
C. To ensure that there is less resistance than reactance in the circuit
D. To ensure that the resistance and reactance in the circuit are equal

What unit is used to measure [?]

reactance? [G5A09]

A. Farad
B. Ohm
C. Ampere
D. Siemens

impedance? [G5A10]

A. Volt
B. Ohm
C. Ampere
D. Watt

Which of the following devices can be used for impedance matching at radio frequencies?

G5A13

A. A transformer
B. A Pi-network
C. A length of transmission line
D. All of these choices are correct

Active Components

Chapter 4.5

Semiconductor Components

(Page 4-20)

Active components are used to amplify, switch, shape or otherwise process a signal.

Semiconductor Components

* Materials that conduct electricity better than an insulator but not as good as metal.
* Silicon (Si) and germanium (Ge) devices are examples of semiconductors
* The electrical properties of semiconductors can be controlled by the addition of small amounts of indium (In) and phosphorus (P)
* The addition of these dopant impurities is called doping
* Material high in electrons results in a N-type material otherwise the impurity creates a P-type material
* Semiconductors are created from the combination of N-type and P-type material. Where they are in contact a PN junction is formed.

Diodes and Rectifiers 1 of 2

(Page 4-20)

A semiconductor **junction diode** uses a PN junction to **block** current flow in one direction and **allow** current flow in the opposite direction.

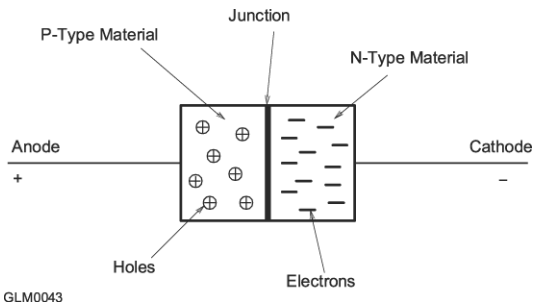

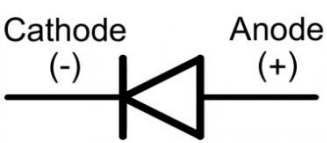

- Current flows when a positive voltage is applied from the P-type to the N-type material and is called **forward bias**
- Voltage applied in the reverse direction is called **reverse bias**
- The diodes forward bias must exceed the **junction threshold voltage (V_f)** to conduct
- (V_f) is 0.7 V for silicon and 0.3 V for germanium [G6A03, G6A05]

Diodes and Rectifiers 2 of 2

(Page 4-21)

Diode Ratings and Parameters

- Peak inverse (or reverse) voltage (PIV) – The maximum reverse voltage that may be applied before reverse breakdown occurs
- Average forward current (I_F) – Limit for the power dissipation, I_F X V_F, of the diode
- Junction capacitance (C_J) – Affects the operation of the diode at high frequencies and it's switching speed

Types of Diodes

- *PIN diode* – conducts ac signals with a low forward voltage drop, used for RF switching and control
- *Schottky diode* – low junction capacitance allows operation at high frequencies [G6A06]
- *Varactor diode* – the reverse-biased junction acts as a capacitor and is sued as a variable capacitor.
- *Zener diode* –used as a voltage regulator while in reverse breakdown
- *Rectifiers* – high-power (current, voltage and power dissipation) devices

Bipolar Transistors

(Page 4-21)

Bipolar transistors are made from P- and N-type material and use current to control their operation.

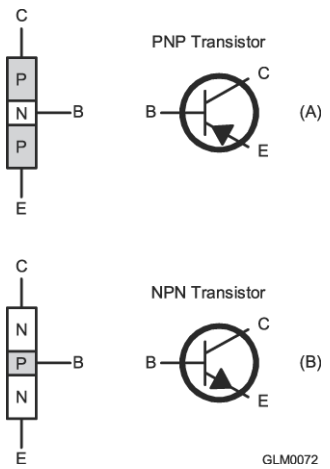

- The base-emitter current (a low value) controls the amount of current flowing between collector and emitter
- The control of a large current by a smaller current is called amplification
- The ratio of collector-emitter current to base-emitter current is called current gain
- Current gain for DC signals is represented by the symbol β (Beta)
- Current gain for AC signals is represented by the symbol h_{FE}

Switching

A transistor amplifier may be used as a switch by biasing it between two states; saturation (on) and cutoff (off) [G6A07]

Field-Effect Transistors (FET)

(Page 4-22)

FET transistors are three electrode devices similar to bi-polar transistors.

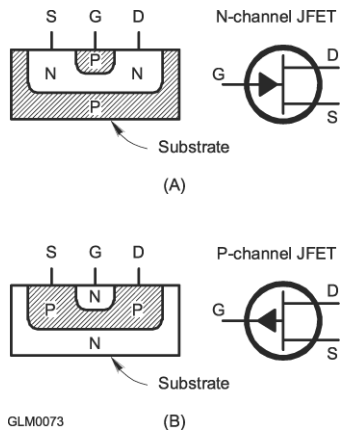

- The gate-source voltage controls the amount of current flowing between source and drain
- Instead of current gain te FET has transconductance (g_M) – the ratio of source-drain current to gate-source voltage
- Junction FET (JFET) – constructed with the gate material in direct contact with the material that connects the source and drain electrodes
- Metal-oxide-semiconductor FET (MOSFET) or the insulated-gate FET (IGFET) - have an insulated layer of oxide between the gate and the rest of the transistor [G6A09]
- JFET's and MOSFET's are highly sensitive

Transistor Package Types

(Page 4-23)

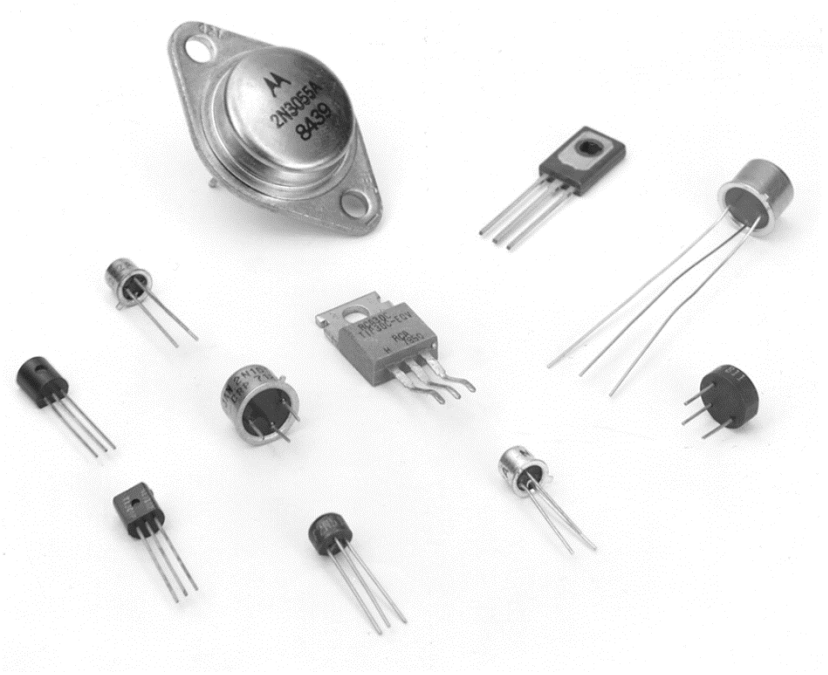

- Identified with a package numbers beginning with "TO" (for Transistor Outline)
- Typical package types are TO-3, TO-92 and TO-220
- Low power devices have insulated plastic packages
- Power transistors have metal cases which are direct connected to collector or source and must be insulated from the heat sink they are mounted in [G6A08]

Vacuum Tubes

(Page 4-21)

Tubes are similar in operation to FET transistors because both devices are controlled by **voltage** [G6A11].

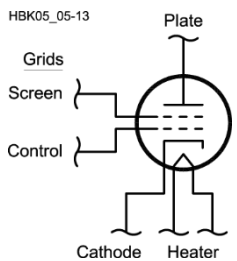

A vacuum tube has 3 basic elements:

1. A source of electrons
2. An electrode to collect electrons
3. Intervening electrodes that control the electrons traveling from the source to the collector
4. Tube types are; diode – two elements, triode – three elements, and tetrode – four elements etc.

Tube Terminology

Page 4 - 21

- Filament or heater – heats the cathode causing it to emit electrons
- Cathode – the source of electrons (-V)
- Control grid – the closets grid to the cathode, used to regulate electron travel between the cathode and plate (high Z) [G6A10]
- Screen grid – an electrode that reduces the grid-to-plate capacitance that limits the tubes at high frequencies [G6A12]
- Suppressor grid – prevents electrons from travelling form the plate to the control or screen grid
- Plate – the electrode that collects electrons, called plate current (+ V)

Vacuum Tube Amplifiers

Page 4-23

Tubes are commonly used devices in RF power amplifiers and high power audio amps.

The high voltages in vacuum tube amplifiers require special safety precautions to prevent electrical shock.

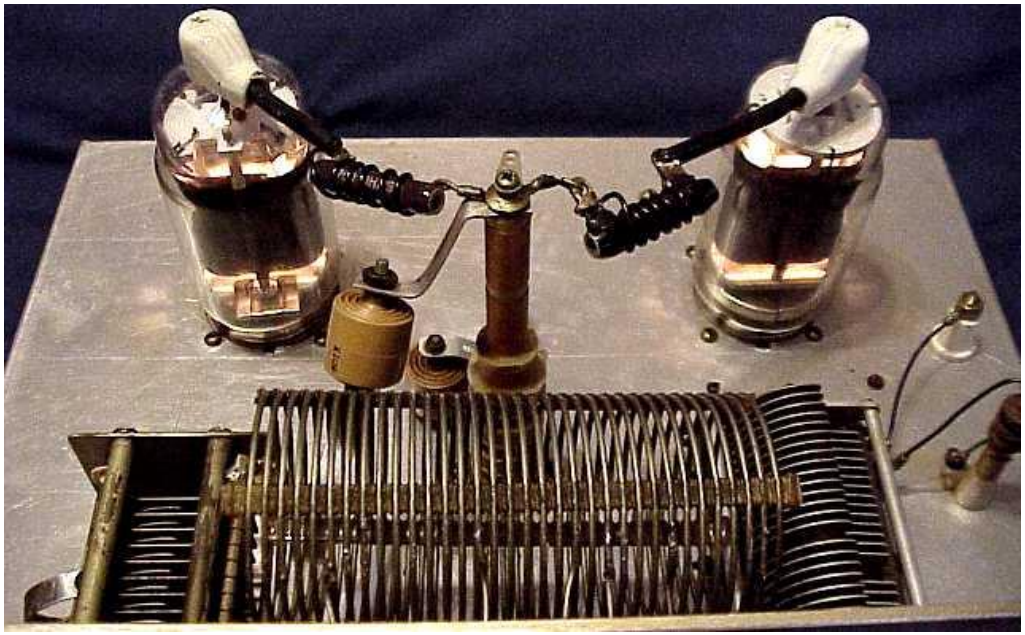

Analog and Digital Integrated Circuits

(Page 4-24)

Integrated circuits (IC) have many transistors, diodes, resistors, capacitors and other devices on a silicon chip.

Two common types of IC's are; analog (or linear) and digital (or logic)

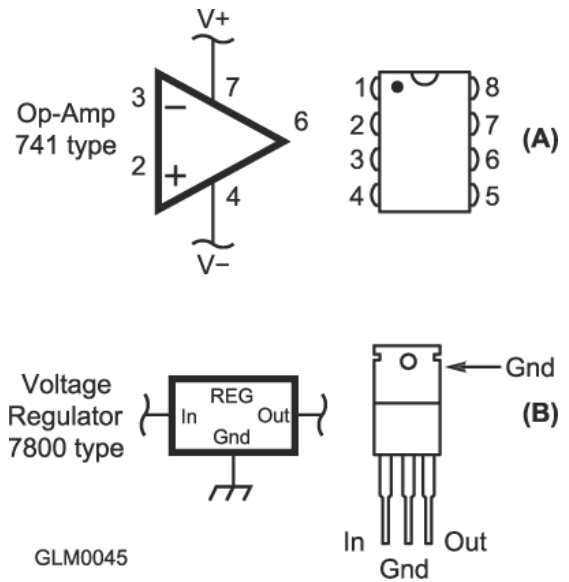

- Analog circuits are used for signal processing that includes; amplification, filtering, measurement and power control
- We might know the analog IC more by the common name of "op amp" or operational amplifier [G6B06]
- Linear voltage regulators maintain power supply voltage of a range of output currents [G6B01]

Digital Integrated Circuits

(Page 4 – 24)

- Digital IC's perform logic using two states (1/0, H/L, True/False, called binary) [G7B02]
- Digital IC's exist in logic family's sharing common operation aspects; TTL and CMOS are the most common
- The Complimentary metal-oxide semiconductor (CMOS) digital IC is the most popular because of it's low power consumption and high speed [G6B03]

Digital Logic Basics

(Page 4-25 to 4-26)

The basic logic building blocks called gates are AND, OR and NOT

There are several combinations of the basic functions that we use in computer chips

Microcontrollers, CPUs and digital signal processor are combinations of these basic logic functions and use combinational logic

Flip-flop circuits combine binary signals in a way that depends on time and sequence of the inputs creating what is called sequential logic

Counters and shift registers are created by connecting one flip-flops output to the next ones input.

The highest number that a counter can represent is 2^N where N is the number of flip-flops in the counter [G7B05]

Shift registers pass or shift their input value to the next flip-flop triggered by the clock signal [G7B06]

Digital Logic Symbols and Math

(Page 4-25, Figure 4 -23)

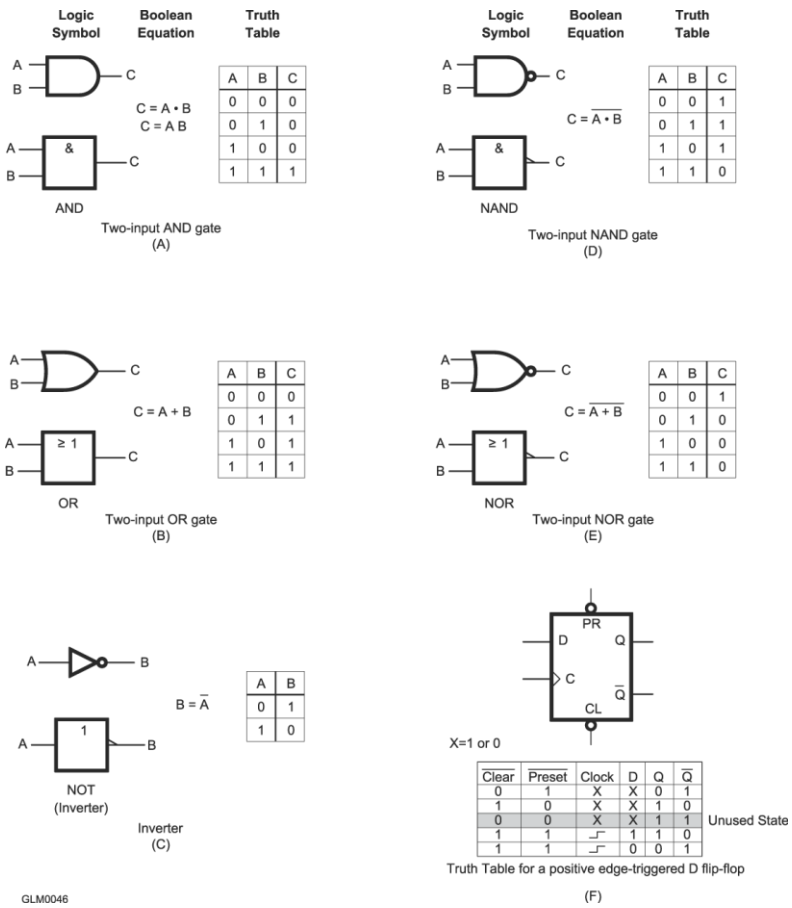

RF Integrated Circuits

(Page 4-26)

RF integrated circuits (IC's) are designed to perform functions at RF frequencies such as:

- Low level high gain amps
- Mixers
- Modulators
- Demodulators
- Filters

RF IC's greatly reduce the number of discrete components and board level connections reducing cost and improving reliability

Monolithic Microwave Integrated Circuits (MMIC) modules are used at microwave frequencies [G6B02]

Devices like cell phones, GPS receivers and wireless products use MMIC modules.

Microprocessors and Related Components

(Page 4-26 to 4-27)

Microcontrollers are a special type of microprocessor with flash program memory, RAM memory, digital and analog circuits (timers, PWM circuits, DAC, ADC) serial communications and I/O ports (i.e. Arduino UNO) [G6B11, G7B01]

* More widely known microprocessors would be the CPU in your computer from Intel, AMD and several other CPU makers (Raspberry Pi also)

* MPU/MCUs are able to execute millions of instructions per second from Flash or RAM memory and store the intermediate data in RAM memory.

Microprocessors require memory to store programs for execution by the CPU

* Volatile memory loses data it stores when power is removed
* Non-volatile memory stores data permanently even if power is removed [G6B05]
* Random-access memory (RAM) can be read from or written to in any order
* Read-only memory (ROM) stores data permanently and cannot be changed [G6B04]

Interfaces (1 of 2)

(Page 4-27)

Microprocessors and computers use two type of interfaces for communicating with the outside world, serial and parallel

Interface	Typical Speed
RS-232	115 Kbit/sec
USB 1.1	1.5 Mbits/sec
USB 2.0	480 Mbits/sec
USB 3.0	5 Gbits/sec
Firewire	800 Mbits/sec

Serial interfaces (COM Ports) transfer one bit of information in each transfer operation

- USB ports are now replacing COM ports on computers
- Serial to USB converters are required for many applications

Interfaces (2 of 2)

(Page 4-27)

USB and serial interfaces are used to connect computers to transceivers and TNC's as well as accessories such as antenna switches and rotators [G6B10]

Parallel interfaces are used to connect memory to the MPU/MCU, or the CPU to hard drives and video cards. High speed serial interfaces are replacing the parallel interfaces.

Network connections are serial interfaces:

- Ethernet, IEEE 802.3, 10/10/1000 Mb/s, wired
- WiFi, IEEE 802.11, wireless
- Bluetooth – for short distances (headsets, etc.)

Visual Interfaces (LEDs)

(Page 4-27 to 4-28)

Amateur radio equipment uses two types of devises to present information visually, indicator and display

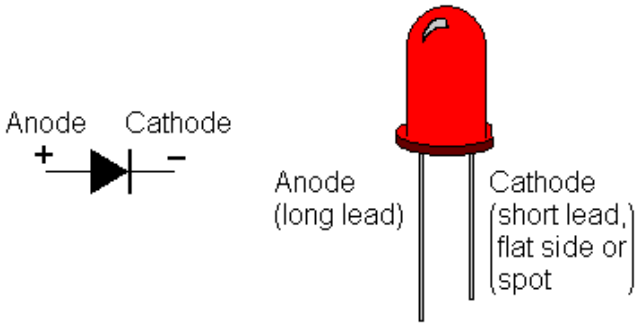

- An indicator is a device that presents ON/OFF information visually by presence/absence/color of light
- Common indicators are incandescent lights or LEDs
- An LED is a diode made from special types of material that emit light when the PN junction is forward biased [G6B08]
- LED's last longer, can be turned on/off quicker, use less power and generate less heat [G6B07]

Visual Interfaces (LCD)

(Page 4-27 to 4-28)

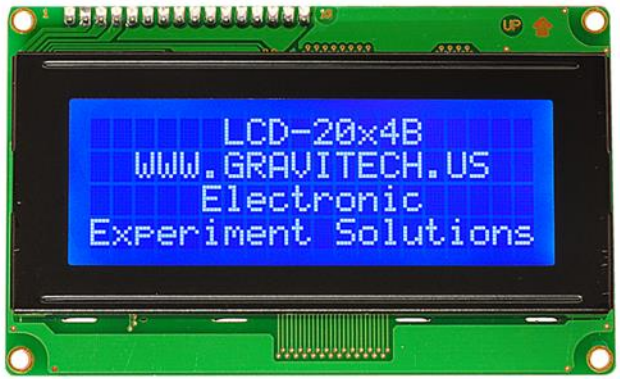

- The most common type of display is a liquid crystal display (LCD) created by sandwiching liquid crystal material between transparent glass panels
- LCD's require backlighting since the liquid crystal does not generate any light on it's own [G6B09]

What is the approximate junction threshold voltage of a germanium diode?

G6A03

A. 0.1 volt
B. 0.3 volts
C. 0.7 volts
D. 1.0 volts

What is the approximate junction threshold voltage of a conventional silicon diode?

G6A05

A. 0.1 volt
B. 0.3 volts
C. 0.7 volts
D. 1.0 volts

What are the stable operating points for a bipolar transistor used as a switch in a logic circuit?

G6A07

A. Its saturation and cutoff regions
B. Its active region (between the cutoff and saturation regions)
C. Its peak and valley current points
D. Its enhancement and depletion modes

Why must the cases of some large power transistors be insulated from ground?

G6A08

A. To increase the beta of the transistor
B. To improve the power dissipation capability
C. To reduce stray capacitance
D. To avoid shorting the collector or drain voltage to ground

Which of the following describes the construction of a MOSFET?

G6A09

A. The gate is formed by a back-biased junction
B. The gate is separated from the channel with a thin insulating layer
C. The source is separated from the drain by a thin insulating layer
D. The source is formed by depositing metal on silicon

Which element of a triode vacuum tube is used to regulate the flow of electrons between cathode and plate?

G6A10

A. Control grid
B. Heater
C. Screen Grid
D. Trigger electrode

Which of the following solid state devices is most like a vacuum tube in its general operating characteristics?

G6A11

A. A bipolar transistor
B. A field effect transistor
C. A tunnel diode
D. A varistor

Which of the following is an analog integrated circuit?

G6B01

A. NAND Gate
B. Microprocessor
C. Frequency Counter
D. Linear voltage regulator

What is meant by the term MMIC?

G6B02

A. Multi Megabyte Integrated Circuit
B. Monolithic Microwave Integrated Circuit
C. Military Manufactured Integrated Circuit
D. Mode Modulated Integrated Circuit

What is meant when memory is characterized as non-volatile?

G6B05

A. It is resistant to radiation damage
B. It is resistant to high temperatures
C. The stored information is maintained even if power is removed
D. The stored information cannot be changed once written

What kind of device is an integrated circuit operational amplifier?

G6B06

A. Digital
B. MMIC
C. Programmable Logic
D. Analog

Which of the following is an advantage of an LED indicator compared to an incandescent indicator?

G6B07

A. Lower power consumption
B. Faster response time
C. Longer life
D. All of these choices are correct

Which of the following is a characteristic of a liquid crystal display?

G6B09

A. It requires ambient or back lighting
B. It offers a wide dynamic range
C. It has a wide viewing angle
D. All of these choices are correct

What two devices in an Amateur Radio station might be connected using a USB interface?

G6B10

A. Computer and transceiver
B. Microphone and transceiver
C. Amplifier and antenna
D. Power supply and amplifier

What is a microprocessor?

G6B11

A. A low power analog signal processor used as a microwave detector
B. A computer on a single integrated circuit
C. A microwave detector, amplifier, and local oscillator on a single integrated circuit
D. A low voltage amplifier used in a microwave transmitter modulator stage

Complex digital circuitry can often be replaced by what type of integrated circuit?

G7B01

A. Microcontroller
B. Charge-coupled device
C. Phase detector
D. Window comparator

How many states does a 3-bit binary counter have?

G7B05

A. 3
B. 6
C. 8
D. 16

Practical Circuits

Chapter 4.6

Rectifiers and Power Supplies

(Page 4-28)

All equipment requires power from some sort of power source; battery, solar panel, AC line.

Handheld and mobile radios typically are powered by batteries.

Most ham equipment uses 13.8V DC power to operate so a power supply is needed to run off the household ac line.

A power supply has three basic parts; an input transformer, a rectifier and a filter-regulator output circuit

Power supplies that use a transformer, capacitor or inductor filters and linear voltage regulators to provide filtering and regulation are called linear supplies.

Rectifier Circuits
Half-Wave and Full-Wave

(Page 4-28 to 4-29)

After the AC transformer, there will be a rectifier circuit that converts bipolar AC waveform into DC pulses.

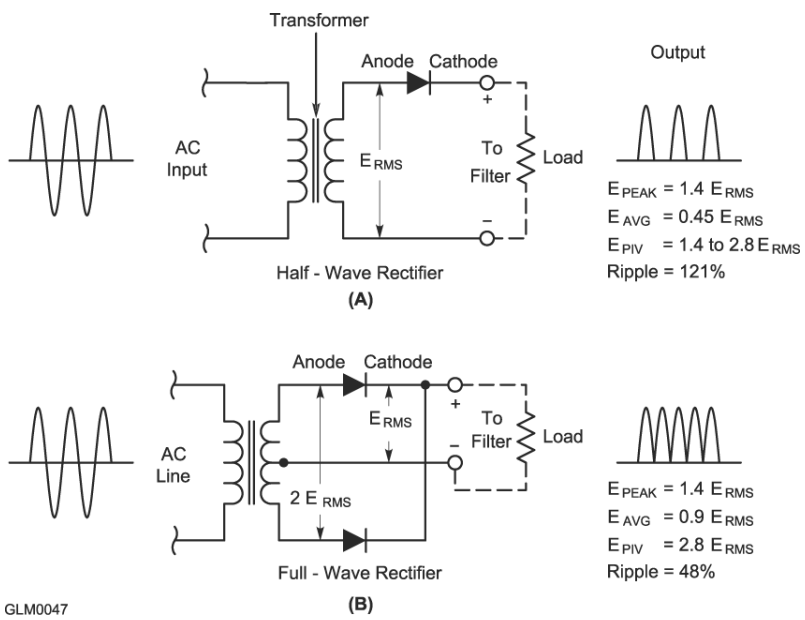

- Half-wave circuit transfers power only ½ of the time (180°) [G7A05]
- Peak inverse voltage applied to the diode in a half-wave rectifier is twice the peak voltage [G7A04]
- The full wave rectifier advantage is that it produces output during the entire 360° of the AC cycle [G7A06]
- The output of the full wave rectifier is a series of pulses at twice the frequency of the input voltage [G7A07]
- A Full-wave center-tapped rectifier requires a transformer that has a center tap connection
- A full-wave center-tapped circuit requires a transformer secondary voltage twice that of the half-wave circuit

Rectifier Circuits
Full-Wave Bridge

(Page 4-29)

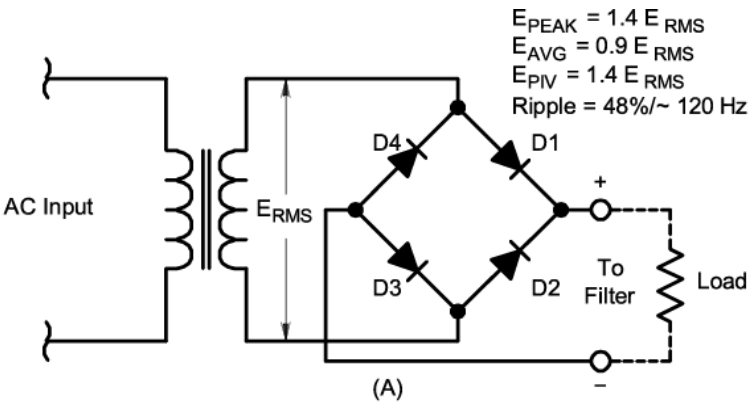

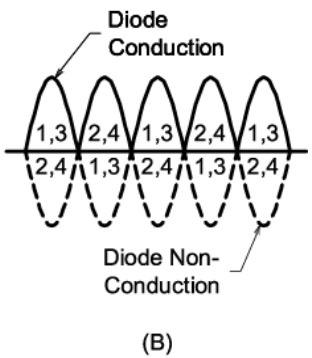

- Bridge rectifiers do not need a center-tapped transformer
- Peak inverse voltage applied to the diode in full-wave is equal to the peak voltage [G7A03]
- Rectifier diodes only supply half the load current as compared to the half-wave rectifier

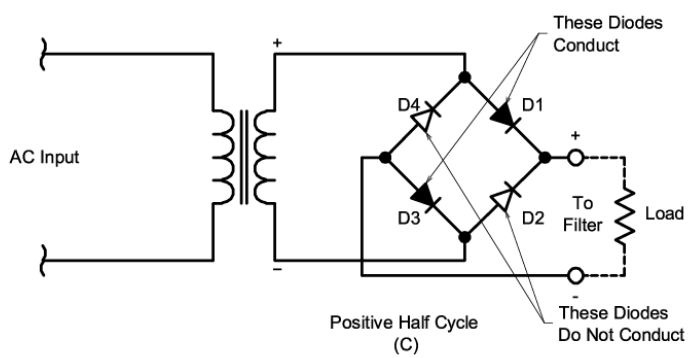

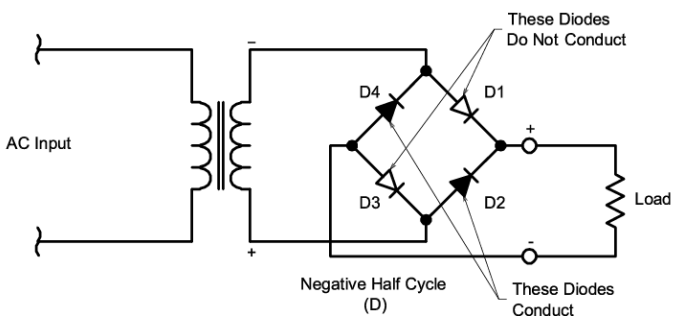

Filter Circuits

(Page 4-30 to 4-31)

A rectifier's output pulses of DC current must be smoothed out by a filter network consisting of capacitors or capacitors and inductor [G7A02]

The variation in output voltage caused by the current pulses is called ripple measured as the percentage of peak-to-peak variation as compared to the average output voltage

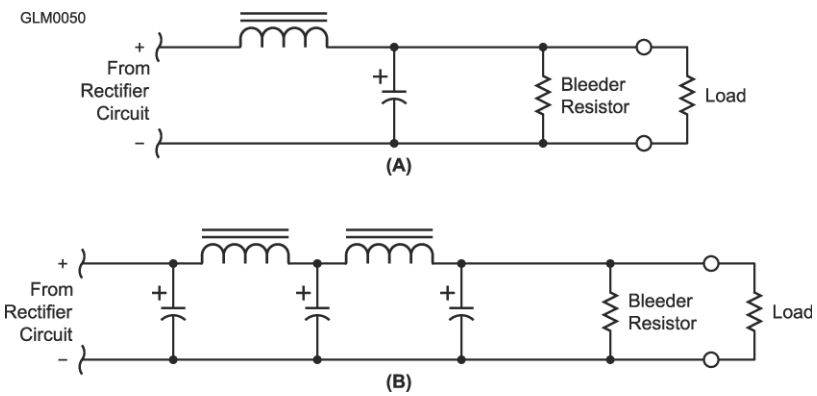

- The most common way of reducing ripple is a large filter capacitor
- Older high voltage supplies might use an inductor in the filter circuit along with 2 sets of filter capacitors
- This is typically called a PI filter

The percentage variation in the output voltage between full-load and no-load is called the power supplies regulation

Power Supply Safety

(Page 4-31)

Safety is important in power supply design because of the connection to the AC line and because of the **amount of energy** involved.

Fuses are used in the AC primary and the DC output circuits to protect against current overloads

Bleeder resistors are used to discharge the stored energy in capacitors when AC power is removed. These resistors should not affect the operation of the power supply and will take some time to discharge the power supply.

A "cheater stick" is recommended when working on high power supplies. This makes sure that the caps are discharged.

Switchmode or Switching Supplies

(Page 4-31 to 4-32)

Switching power supplies use high-frequency pulses of current to control the output voltage

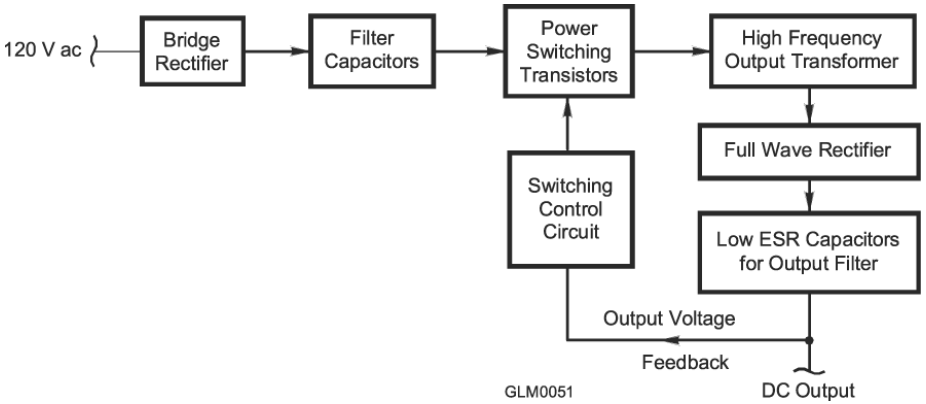

- Uses a transistor switch to create a pulse frequency in the range of 20 kHz from the 120 V ac line
- Reacts quickly to load demands
- The high frequency means the small light weight inductors and capacitors can be used to smooth the pulses and filter the output [G7A08]

Batteries and Chargers

(Page 4-32 to 4-33)

There are two basic types of batteries; primary (discard) and secondary (re-chargable).

Larger secondary batteries (storage batteries) such as deep-cycle lead-acid marine or RV batteries can produce useful power down to about 10.5V,

Storage battery float voltage is 13.8 V

Discharging the storage battery below it's minimum voltage will reduce it's life [G6A01]

Nicad (NiCd) batteries are designed to have a low internal resistance to supply high discharge currents [G6A02]

Never attempt to recharge a primary battery such as carbon-zinc or silver-nickel [G6A04]

Batteries are used in many ham radio products like 2M and 70cm radios. The battery packs are rechargeable and will operate the radio for many hours.

Alternative Power

(Page 4-33)

Alternative power sources:

- Generator (most often used)
- Solar
- Wind

Solar power is most often referring to photovoltaic conversion of sunlight [G6A04]

Solar panels use a number of silicon PN junction cells to build the system

Typically the open-circuit cell voltage is about 0.5V each [G6E08]

A panel with a 12V output would be made up of at least 24 cells connected in series

Panels are connected in parallel to generate higher power

Energy Storage

(Page 4-33)

Systems that create energy from wind and solar power may require a substantial energy storage system [G4E11]

Storage batteries are the usual means of energy storage that can provide energy at night or when the wind isn't blowing strong enough.

In solar power systems, the battery connection is made through a series-connected diodes to prevent the battery from discharging back into the solar panel when the power output is low [G4E10]

Connectors

(Page 4-34)

Connecters are a convenient way to make electrical connection by using mating electrical contacts

Keyed connectors ensure that connectors can only go together one way, ensuring the correct connection [G6B15]

There are many examples of connectors on pages 4-34 and 4-35.

Power Connectors

(Page 4-34 to 4-35)

There are a number of power connectors but Anderson Powerpole connectors for 12V units are the ARES and EMCOM preferred

Wall warts use a variety of barrel type connectors for lower power units.

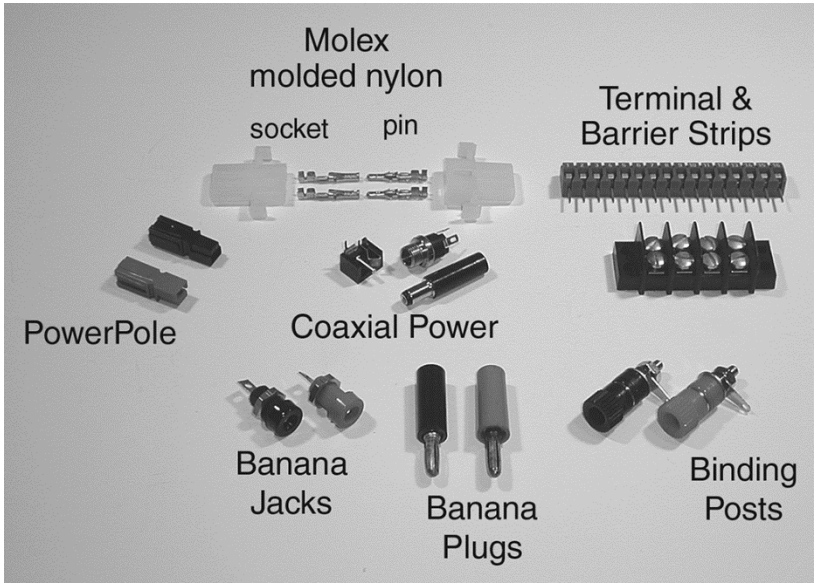

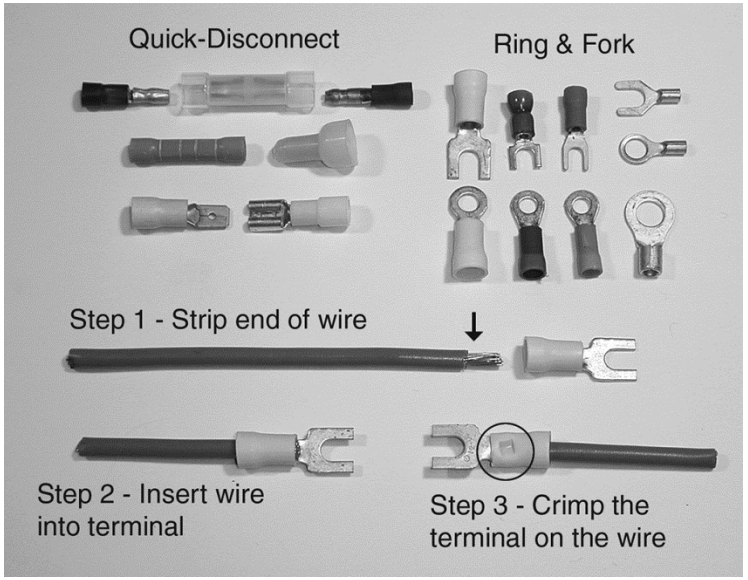

Audio and Control Connectors

(Page 4-35)

Phone plugs and jacks can be used for audio connections and come in sizes of ¼” and 1/8” typically. They consist of a tip, ring and sleeve.

Phono plugs and jacks (RCA connectors) are used for audio, video, low level RF and also control signals [G6B14]

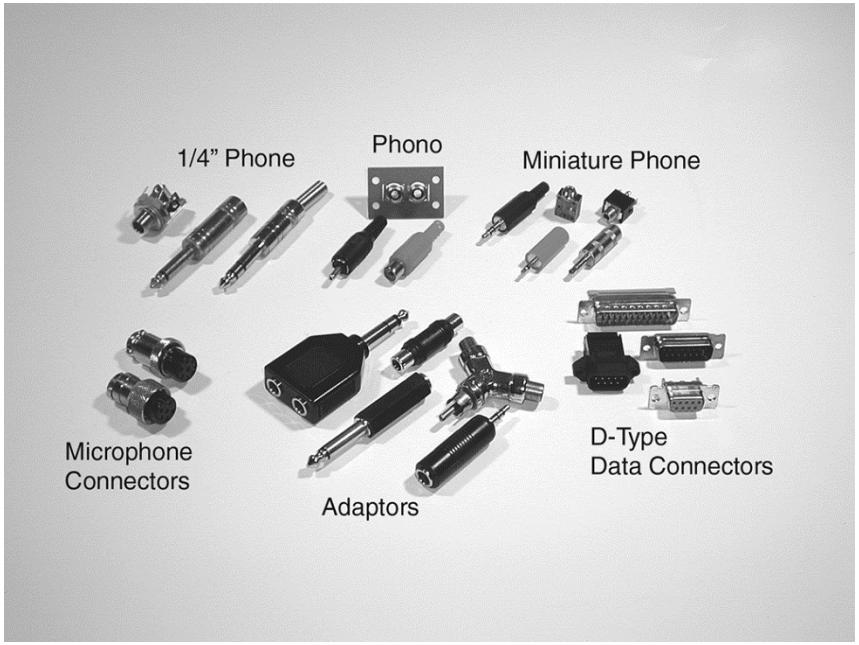

- DIN connectors are used for ham radios for digital mode, computer control of the radio and linear command/control interfaces and have up to 8 pins [G6B17]

- Microphone connections can be 4 or 8 pin round connectors or eight pin RJ-45 on newer rigs

RF Connectors

(Page 4-36)

The most common RF connector is the UHF family of PL-259/SO-239 style parts and can handle up to legal limit power on HF [G6B13]

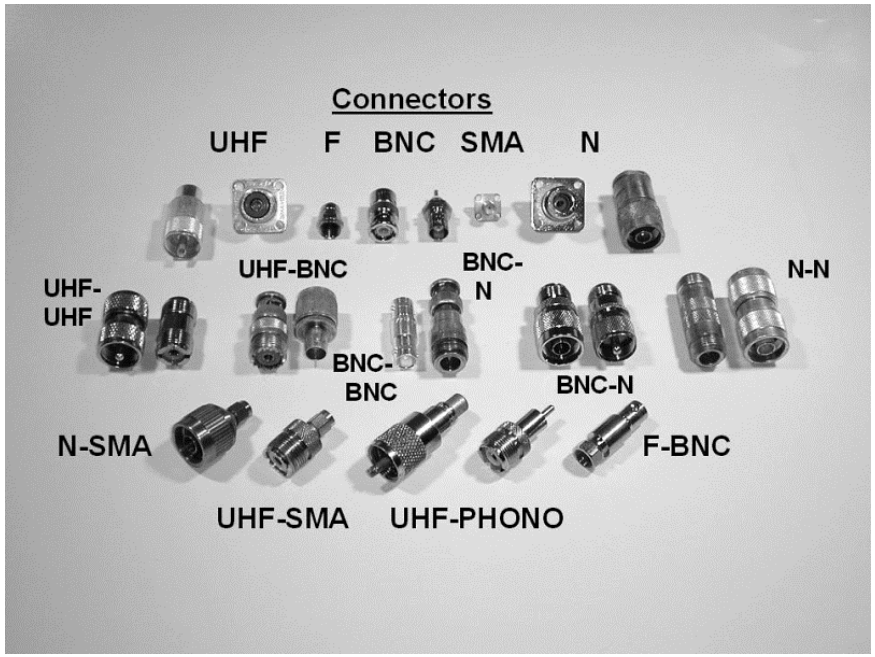

- UHF connectors up to 150 MHz but many radios use it for 70 cm operation
- N-type connectors are used for VHF and UHF applications because of better RF capability and lower return loss and can be used up to 10GHz [G6B16]
- BNC connectors used on oscilloscopes, test equipment and low power RF (handhelds).
- Handheld radios use the SMA connectors (up to 18GHz) for antenna connections [G6B18]

Data Connectors

(Page 4-36)

D-type connectors are used for RS-232 (COM port) interfaces

DB-9 and DB-25 (modems) connectors were common computer serial port connectors but DB-9 is the only one used much today [G6B12]

USB connectors are more popular today but there are a number of styles of connectors that will not interchange with each other:

- USB Mini
- USB Micro
- Apple Lightning
- USB 3 Type C

Since serial com ports are not found on most new computers RS-232 to USB adapter cables are available.

Basic Test Equipment

Chapter 4.7

Basic Test Equipment

(Page 4-37)

As you gain experience with radios, accessories and antennas, you'll find yourself needing to make simple checks and tests.

Volt-Ohm-Meter is a great first piece of test equipment

A SWR meter is a piece of equipment that you can use all the time in your operating station

An Antenna Analyzer can used very useful if you are working on antennas or setting up an antenna.

Analog and Digital Meters

(Page 4-37)

A VOM (volt-ohm-meter) is probably the first piece of test equipment most amateurs use

- Analog and digital versions
- Digital multi-meter (DMM) can provide greater precision than analog meters [G4B06]
- Analog meters are easier to read when adjusting a circuit [G4B14]
- When measuring voltage the meter should have a high input impendence (1M ohm) to minimize load on the circuit under test [G4B05]

Oscilloscope Basics

(Page 4-37 to 4-38)

The oscilloscope is one of the most versatile pieces of test equipment available able to observe complex and fast changing waveforms that are beyond the ability of meters to measure [G4B02]

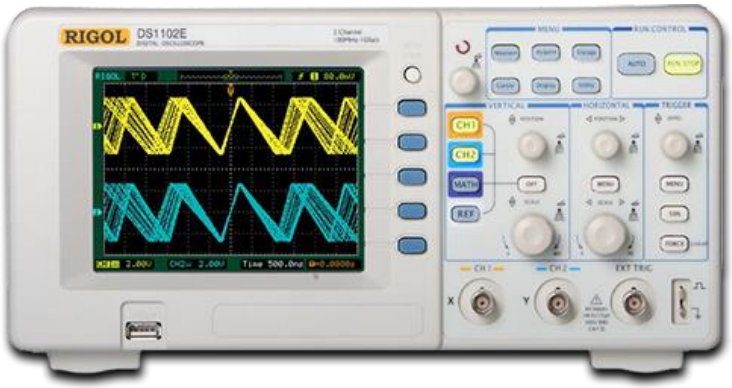

- External signals are connected to the horizontal and vertical amplifiers
- An internal time base usually sweeps the electron beam along the horizontal axis (trace) at a highly stable calibrated rate so the scope can make accurate measurements of time and frequency.

Oscilloscope Waveform Monitoring

(Page 4 – 38)

A monitoring oscilloscope attached to the attenuated output of the transmitter is useful in seeing the quality of your signal and checking for modulation percentage, distortion and key clicks [G4B04, G4B03]

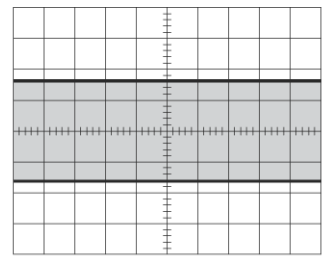

GLM0052 (A)

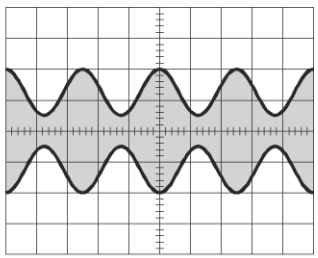

(B)

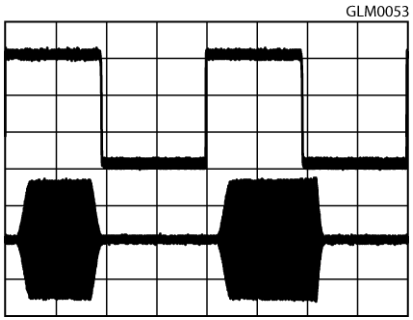

Impedance and Resonance Measurements

(Page 4-38 to 4-39)

An antenna analyzer is very useful when building or testing an antenna

The analyzer can be used to check for resonant frequency of the antenna without transmitting [G4B11]

Other measurements capabilities are [G4B13]:

- Impedance (R +/-j)
- SWR
- Coax velocity factor
- Electrical length of a cable
- Frequency

Antenna analyzers use **small signals** to make measurements so they can be affected by strong RF signals [G4B12]

Field Strength and RF Power Meters

(Page 4-39~40)

A field strength meter can be used for antenna efficiency and radiation pattern testing [G4B09]. The field strength meter can be affected by other RF signals.

A field strength meter can be used for comparative measurements during antenna and transmitter adjustments [G4B08]

Directional wattmeter (SWR meter) is placed in the transmission line and measures the forward and reflected power in the antenna and coax[G4B10]

SWR (standing wave ratio) can be calculated from forward and reflected power measurements using the following formula:

$$SWR = 1 + \sqrt{\frac{P_R}{P_F}} \,/\, 1 - \sqrt{\frac{P_R}{P_F}}$$

What item of test equipment contains horizontal and vertical channel amplifiers?

G4B01

A. An ohmmeter
B. A signal generator
C. An ammeter
D. An oscilloscope

Which of the following is an advantage of an oscilloscope versus a digital voltmeter?

G4B02

A. An oscilloscope uses less power
B. Complex impedances can be easily measured
C. Input impedance is much lower
D. Complex waveforms can be measured

Which of the following is the best instrument to use when checking the keying waveform of a CW transmitter?

G4B03

A. An oscilloscope
B. A field strength meter
C. A sidetone monitor
D. A wavemeter

Which of the following can be determined with a directional wattmeter?

G4B10

A. Standing wave ratio
B. Antenna front-to-back ratio
C. RF interference
D. Radio wave propagation

What problem can occur when making measurements on an antenna system with an antenna analyzer?

G4B12

A. Permanent damage to the analyzer may occur if it is operated into a high SWR

B. Strong signals from nearby transmitters can affect the accuracy of measurements

C. The analyzer can be damaged if measurements outside the ham bands are attempted

D. Connecting the analyzer to an antenna can cause it to absorb harmonics

What is a use for an antenna analyzer other than measuring the SWR of an antenna system?

G4B13

A. Measuring the front to back ratio of an antenna
B. Measuring the turns ratio of a power transformer
C. Determining the impedance of an unknown or unmarked coaxial cable
D. Determining the gain of a directional antenna

What is an instance in which the use of an instrument with analog readout may be preferred over an instrument with a digital readout?

G4B14

A. When testing logic circuits
B. When high precision is desired
C. When measuring the frequency of an oscillator
D. When adjusting tuned circuits

Chapter 4 Component and Circuits

Remember to study ALL questions in your chapters.